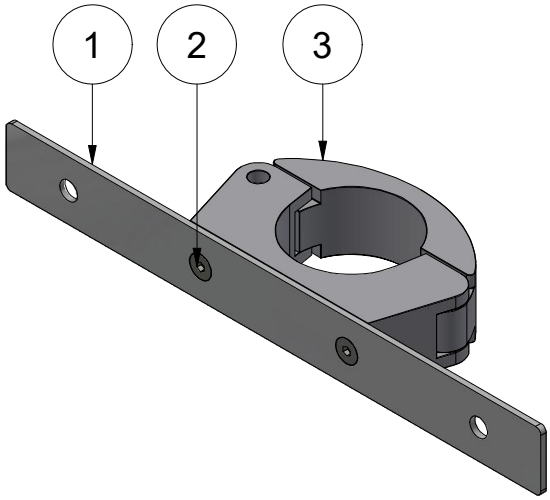

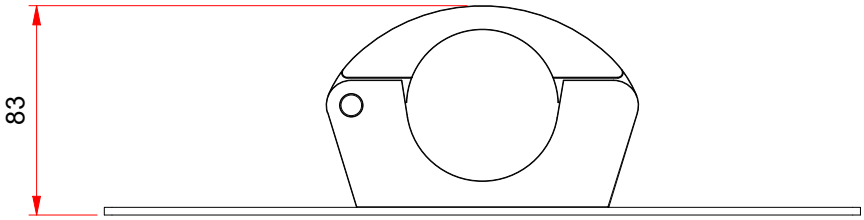

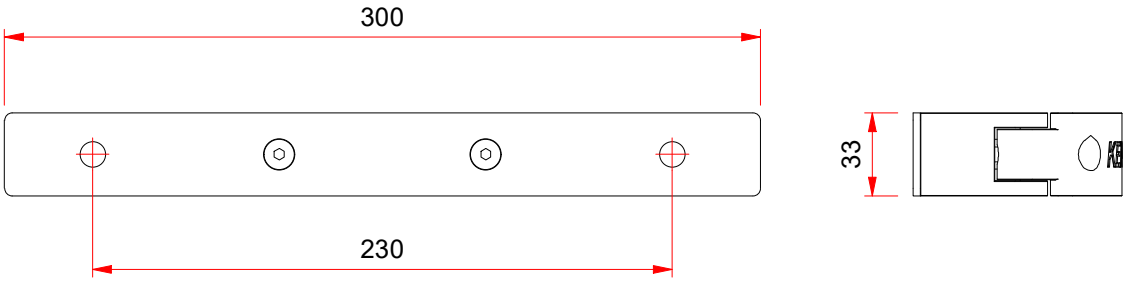

WFS	WIT FIJNSTRUCTUUR
ZFS	ZWART FIJNSTRUCTUUR
WZG	WIT ZIJDEGLANS
ZZG	ZWART ZIJDEGLANS
CUS	CUSTOM COLOR

POS	QTY	DESCRIPTION	STOCK NUMBER	PARTNUMBER
3	1	Mounting Clamp 3D Printed	Mounting Clamp 3D Printed	K0000-0020-0000-0
2	2	Hexagon socket countersunk head cap screws		DIN 7991 - M6x20
1	1	Rally Speaker Mount	T = 3 mm	K0300-0315-0000-0

KENWEL
DESIGNED FOR DISPLAY

Bedrijfsweg 1
3481 MG, Harmelen
Nederland

www.kenwel.nl
info@kenwel.nl
+31(0)348 443485

FAMILY: ACCESSORIES

CLIENT:

THIRD ANGLE PROJECTION

DRAWING NUMBER: K1300-4015-0

REVISION: 0

DRAWN BY: JDB

CREATION DATE: 3-8-2023

CHECKED BY: WJ

CHECKED DATE: 27-8-2026

SCALE: 1 : 3

UNITS: mm

STATUS: RELEASED

NAME: Rally Speaker Mount

FORMAT: A4

SHEET: 1 / 1

©THIS DRAWING REMAINS PROPERTY OF KENWEL BV EN IS NOT TO BE COPIED OR PUBLISHED WITHOUT OUR CONSENT.