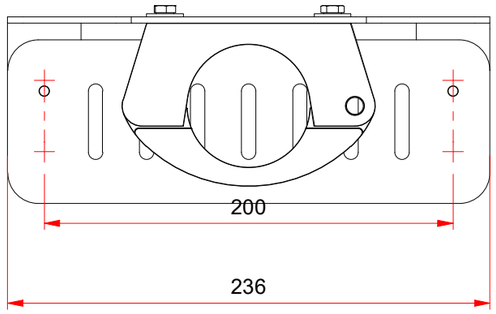

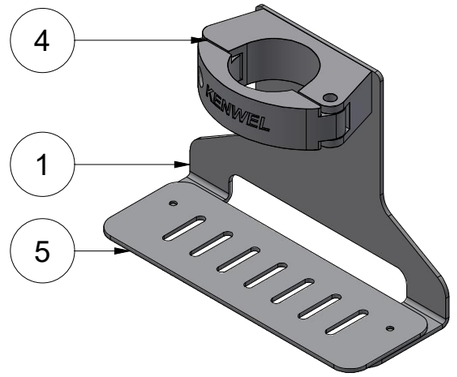

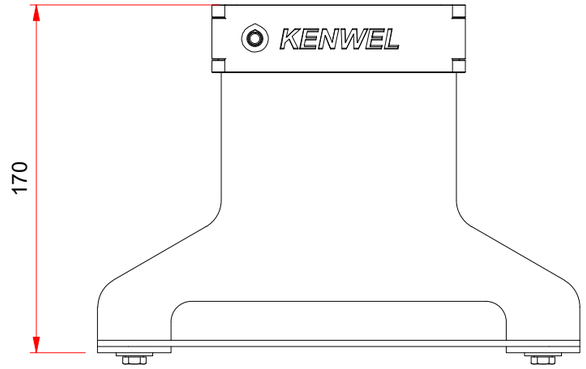

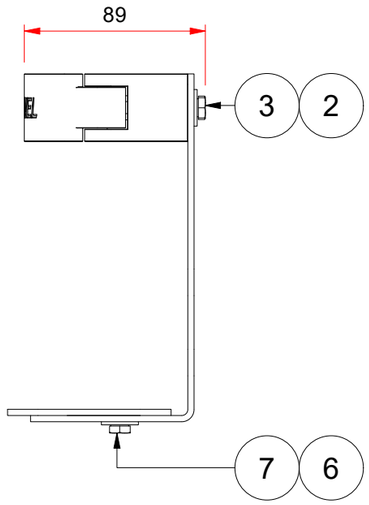

WFS	WIT FIJNSTRUCTUUR
ZFS	ZWART FIJNSTRUCTUUR
WZG	WIT ZIJDEGLANS
ZZG	ZWART ZIJDEGLANS
CUS	CUSTOM COLOR

POS	QTY	DESCRIPTION	STOCK NUMBER	PARTNUMBER
7	2	Hex-Head Bolt		DIN 933 - M6 x 6
6	2	Washer		DIN 9021 - 6,4
5	1	Videobar Adapter Plate	T = 3 mm	K0300-0000-0001-0
4	1	Mounting Clamp 3D Printed	Mounting Clamp 3D Printed	K0000-0020-0000-0
3	2	ZESKANTBOUT		DIN 933 - M6 x 20
2	2	VLAKKE SLUITRING GROOT		DIN 9021 - 6,4
1	1	Videobar Mount Flex	T = 3 mm	K0300-0304-0000-0

KENWEL
DESIGNED FOR DISPLAY

Bedrijfsweg 1
3481 MG, Harmelen
Nederland

www.kenwel.nl
info@kenwel.nl
+31(0)348 443485

FAMILY: ACCESSORIES

CLIENT:

THIRD ANGLE PROJECTION

DRAWING NUMBER: K1300-1004-0

REVISION: 0

DRAWN BY: JVA

CREATION DATE: 23-6-2026

CHECKED BY: WJ

CHECKED DATE: 27-8-2026

SCALE: 1 : 3

UNITS: mm

STATUS: RELEASED

NAME: Videobar Mount Flex

FORMAT: A3

SHEET: 1 / 1

©THIS DRAWING REMAINS PROPERTY OF KENWEL BV EN IS NOT TO BE COPIED OR PUBLISHED WITHOUT OUR CONSENT.