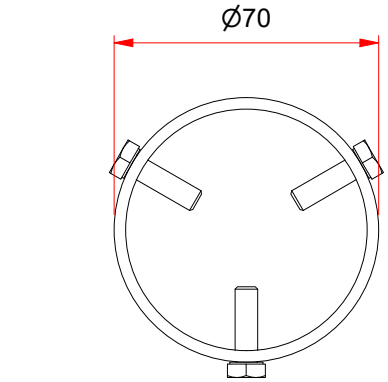

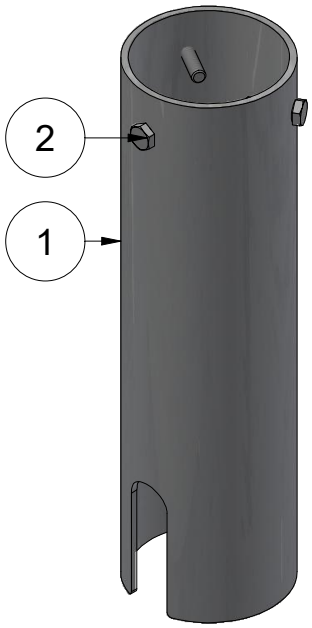

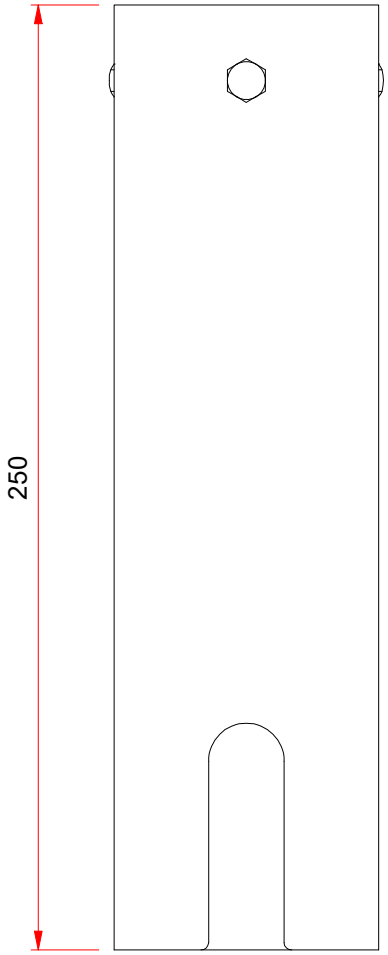

WFS	WIT FIJNSTRUCTUUR
ZFS	ZWART FIJNSTRUCTUUR
WZG	WIT ZIJDEGLANS
ZZG	ZWART ZIJDEGLANS
CUS	CUSTOM COLOR

POS	QTY	DESCRIPTION	STOCK NUMBER	PARTNUMBER
2	3	ZESKANTBOUT		DIN 933 - M6 x 20
1	1	COVERSET 250	COVERSET 250	K0300-0355-0000-0

KENWEL
DESIGNED FOR DISPLAY

Bedrijfsweg 1
3481 MG, Harmelen
Nederland

www.kenwel.nl
info@kenwel.nl
+31(0)348 443485

FAMILY: ACCESSORIES

CLIENT:

THIRD ANGLE PROJECTION

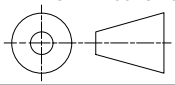

DRAWING NUMBER: K1300-0055-0

REVISION: 0

DRAWN BY: JVA

CREATION DATE: 18-5-2026

CHECKED BY: WJ

CHECKED DATE: 27-8-2026

SCALE: 1 : 2

UNITS: mm

STATUS: RELEASED

NAME: Coverset 250

FORMAT: A4

SHEET: 1 / 1

©THIS DRAWING REMAINS PROPERTY OF KENWEL BV EN IS NOT TO BE COPIED OR PUBLISHED WITHOUT OUR CONSENT.