A-A (1 : 6)

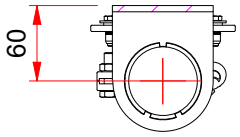

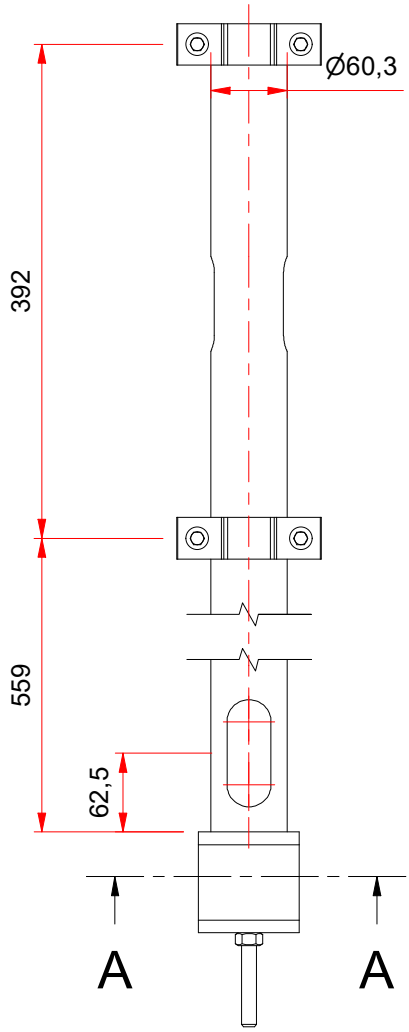

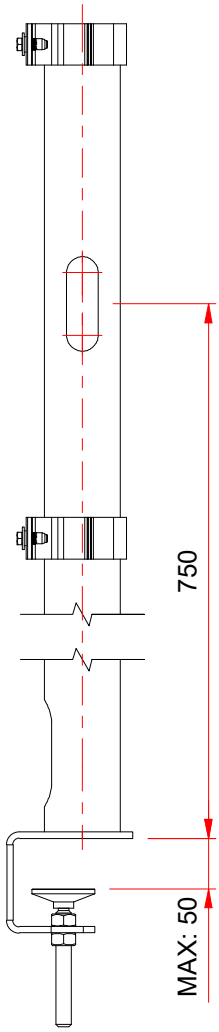

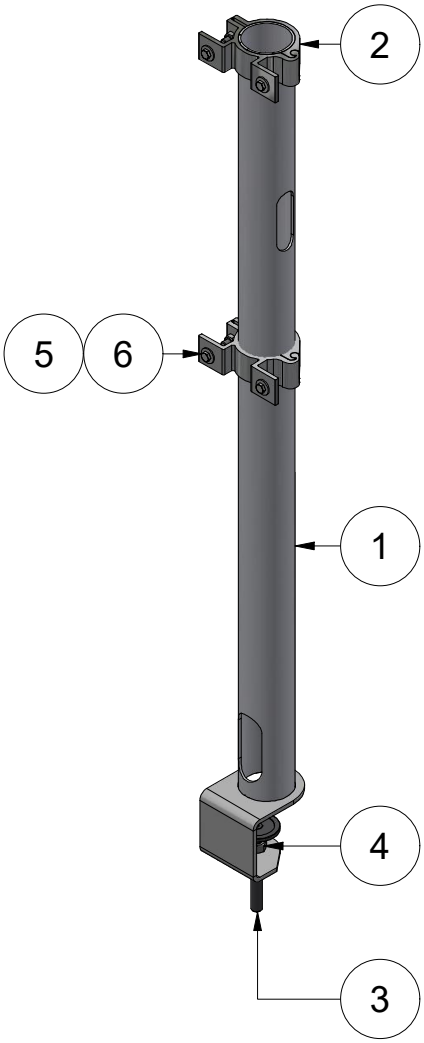

WFS	WIT FIJNSTRUCTUUR
ZFS	ZWART FIJNSTRUCTUUR
WZG	WIT ZIJDEGLANS
ZZG	ZWART ZIJDEGLANS
CUS	CUSTOM COLOR

POS	QTY	DESCRIPTION	STOCK NUMBER	PARTNUMBER
6	4	ZESKANTBOUT		DIN 933 - M6 x 20
5	4	VLAKKE SLUITRING GROOT		DIN 9021 - 6,4
4	2	Hex Nut		DIN 934 - M12
3	1	GN 638 ST-Ball jointed levelling feet		Ball jointed levelling foot GN 638-50-M12-94-ST (0)
2	2	Mounting Clamp Basic	Mounting Clamp Basic	K0000-0001-0000-0
1	1	T Mount	T Mount	K0100-0160-0000-0

KENWEL
DESIGNED FOR DISPLAY

Bedrijfsweg 1
3481 MG, Harmelen
Nederland

www.kenwel.nl
info@kenwel.nl
+31(0)348 443485

FAMILY: MOUNTS

CLIENT:

THIRD ANGLE PROJECTION

DRAWING NUMBER: K1110-0060-0

REVISION: 0

DRAWN BY: JVA

CREATION DATE: 30-5-2023

CHECKED BY: WJ

CHECKED DATE: 27-8-2026

SCALE: 1 : 6

UNITS: mm

STATUS: RELEASED

NAME: Table Mount

FORMAT: A4

SHEET: 1 / 1

©THIS DRAWING REMAINS PROPERTY OF KENWEL BV EN IS NOT TO BE COPIED OR PUBLISHED WITHOUT OUR CONSENT.