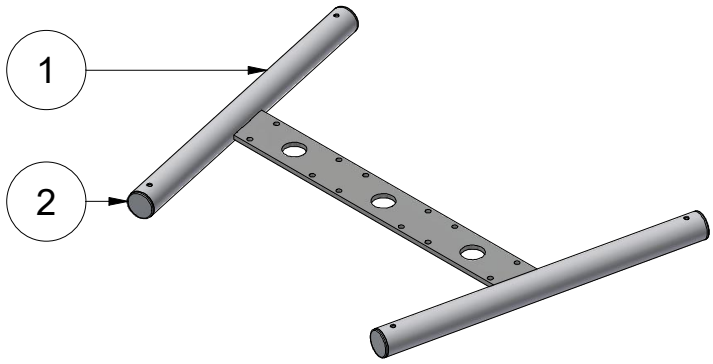

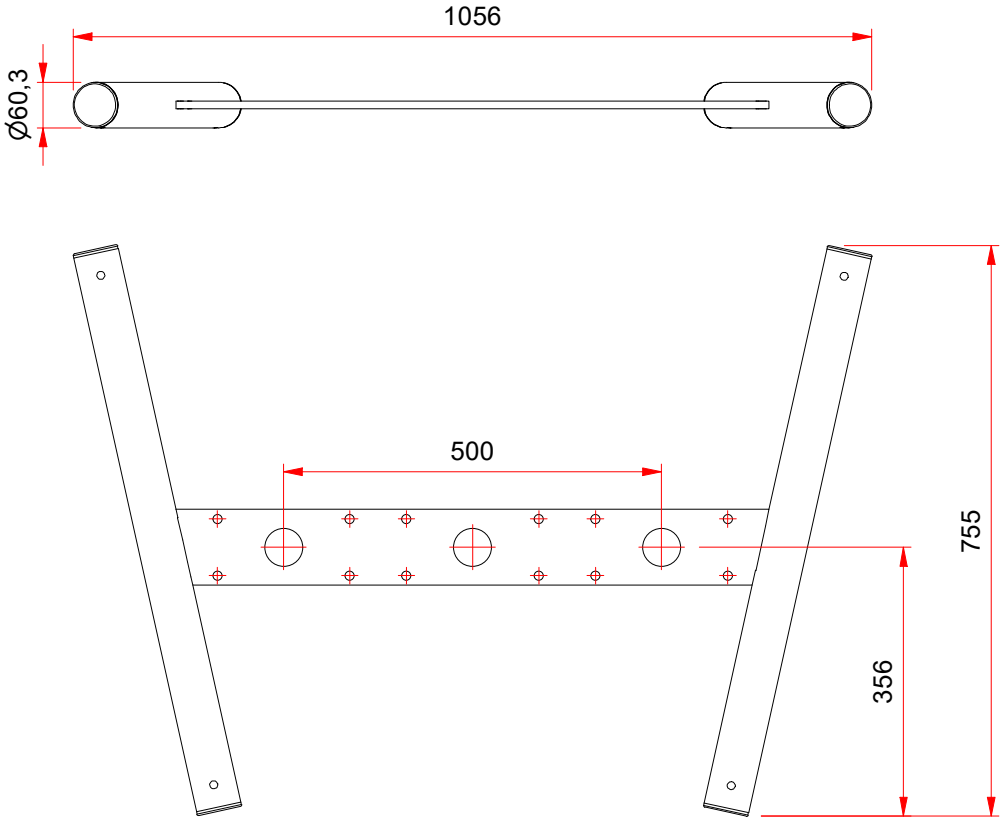

MATCH END CAP COLOR
TO COATING!

WFS	WIT FIJNSTRUCTUUR
ZFS	ZWART FIJNSTRUCTUUR
WZG	WIT ZIJDEGLANS
ZZG	ZWART ZIJDEGLANS
CUS	CUSTOM COLOR

POS	QTY	DESCRIPTION	STOCK NUMBER	PARTNUMBER
2	4	Insteekdop Platte Kop 60X2,9-4,0 Wit	6030060 W	Insteekdop plat wit 60,3x2,9
1	1	F Mount Luxe	F Mount Luxe	K0000-0150-0000-0

KENWEL
DESIGNED FOR DISPLAY

Bedrijfsweg 1
3481 MG, Harmelen
Nederland

www.kenwel.nl
info@kenwel.nl
+31(0)348 443485

FAMILY: PARTS

CLIENT:

THIRD ANGLE PROJECTION

DRAWING NUMBER: K1000-1050-0

REVISION: 0

DRAWN BY: TVZ

CREATION DATE: 11-2-2021

CHECKED BY: WJ

CHECKED DATE: 27-8-2026

SCALE: 1 : 10

UNITS: mm

STATUS: RELEASED

NAME: Floor Mount Luxe

FORMAT: A4

SHEET: 1 / 1

©THIS DRAWING REMAINS PROPERTY OF KENWEL BV EN IS NOT TO BE COPIED OR PUBLISHED WITHOUT OUR CONSENT.